DATE	DESCRIPTION	REV.

RECOMMENDED SPACING FOR PC LUGS

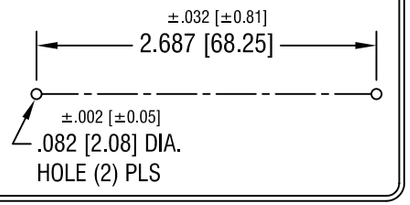

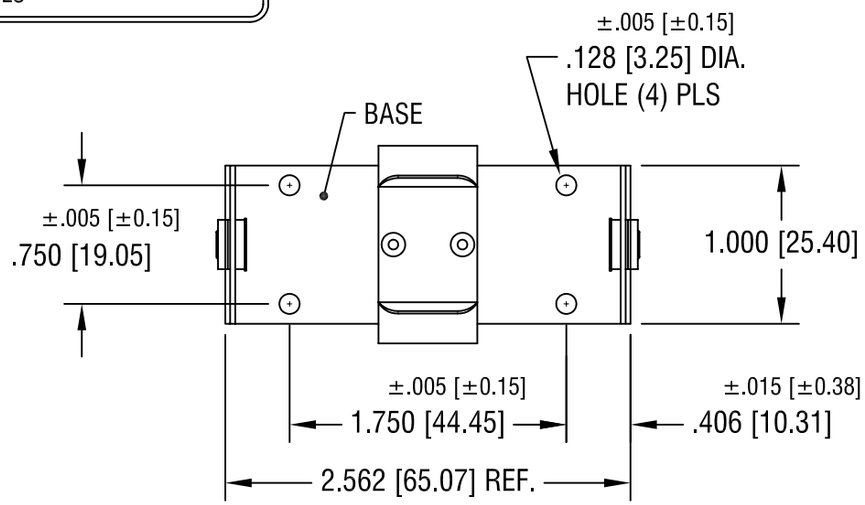

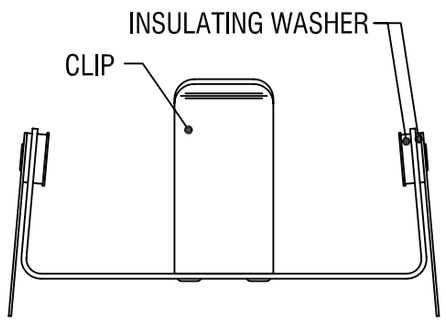

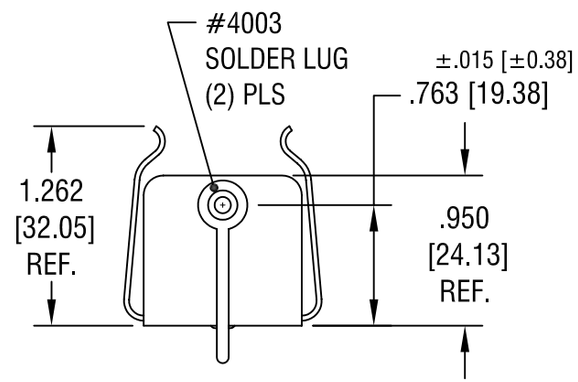

NOTES:

1. BASE: MAT'L - .032 [.81] TH'K ALUMINUM
   CLIP: MAT'L - .032 [.81] TH'K ALUMINUM
   SOLDER LUG: MAT'L - BRASS
   FINISH - TIN PLATE

THIS DOCUMENT IS THE PROPERTY OF KEYSTONE ELECTRONICS CORP. AND SHALL NOT BE REPRODUCED, DISTRIBUTED OR USED AS A BASIS FOR MANUFACTURE WITHOUT PRIOR WRITTEN PERMISSION FROM KEYSTONE ELECTRONICS CORP.

KEYSTONE ELECTRONICS CORP.
ASTORIA, N.Y. 11105-2017

PART NAME	BATTERY HOLDER, (1) 'D' CELL		
MATERIAL	AS NOTED		
FINISH	AS NOTED	DRN BY BOONE	DATE 6.22.07
		APP'D LN	SCALE .9X
TOLERANCES INCH [MM] DECIMAL ± .010 [± 0.25] ANGULAR ± 1° UNLESS OTHERWISE SPECIFIED	CODE C	DWG NO. 2226	