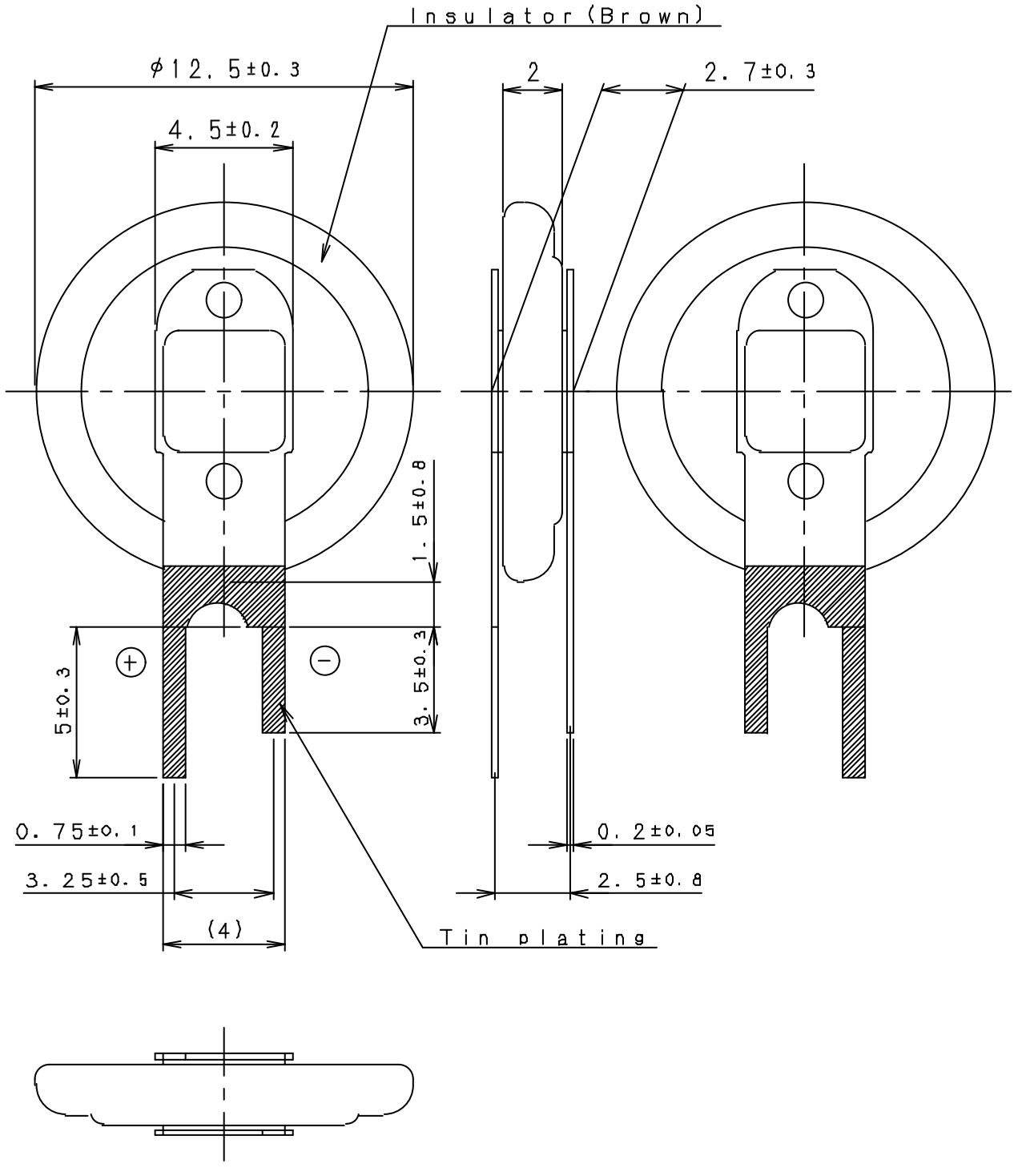

Unit:mm

Scale	5/1	Drawn	. .	Designed		Checked		Approved		Name	VL1220/1VC
										No.	PS-V12251 (1)

Matsushita Battery Industrial Co., Ltd. Lithium and Micro Battery Business Unit