8660

mascot
tech spec

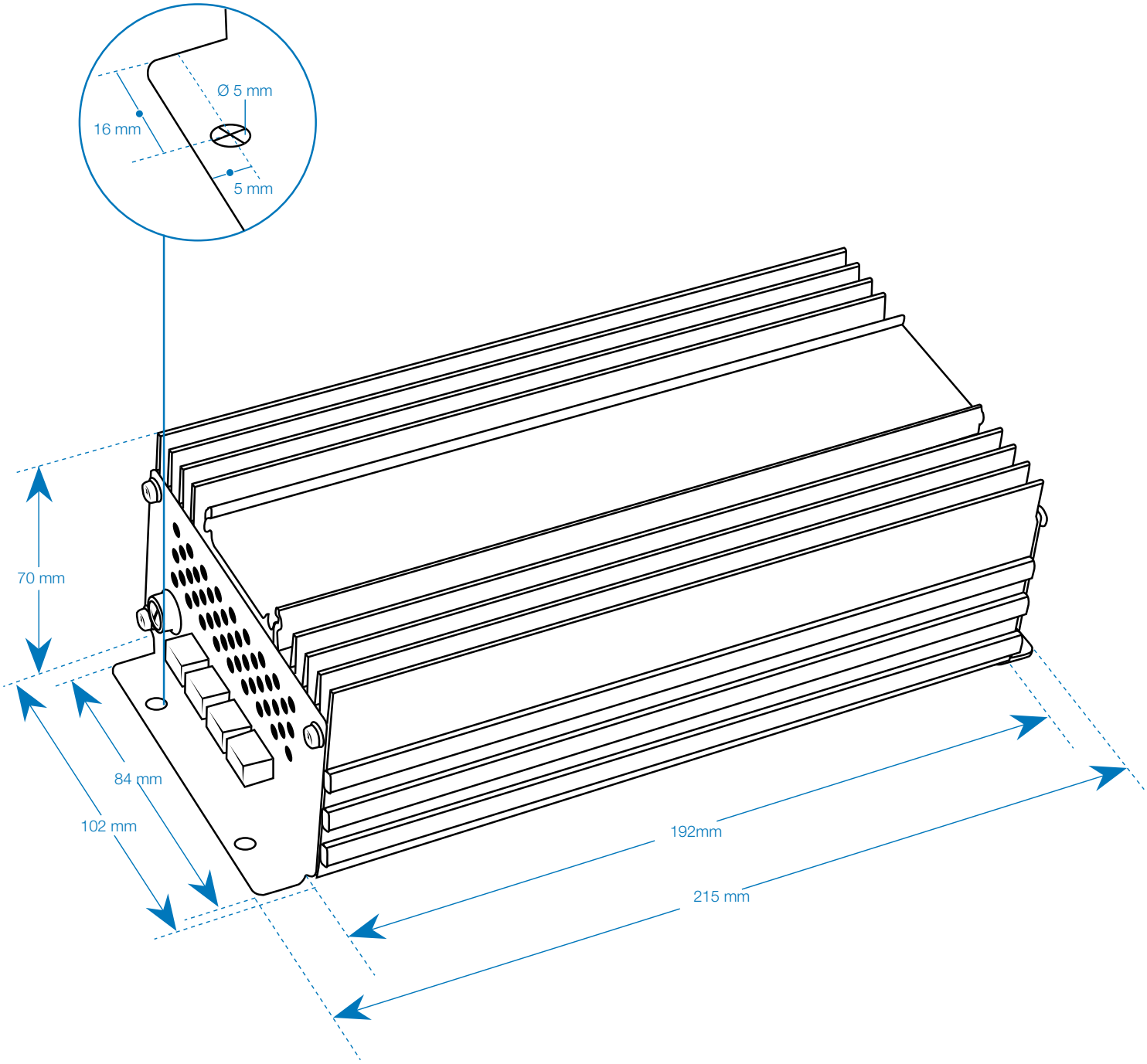

Main Office NORWAY
Box 177
N-1601 Fredrikstad
+47 69 36 43 00

Mascot UK
Box 2090, Salisbury
Wiltshire SP2 2BH
+44 172 250 4853

Mascot DE, BENELUX
Hirschbergstr. 28/7
D-74838 Limbach
+49 628 795 140

Mascot DE, CH, AT
Tettnanger Str. 52
D-88239 Wangen
+49 752 895 1677

Mascot FRANCE
38 rue Leo Lagrange
F-94270 Le Kremlin Bicêtre
+33 146 587 185

Mascot BALTIC, RUSSIA
Peterburi tee 81
11415, Tallin, Estonia
+372 555 21 121

Mascot SWEDEN
Box 177
N-1601 Fredrikstad
+46 526 14025